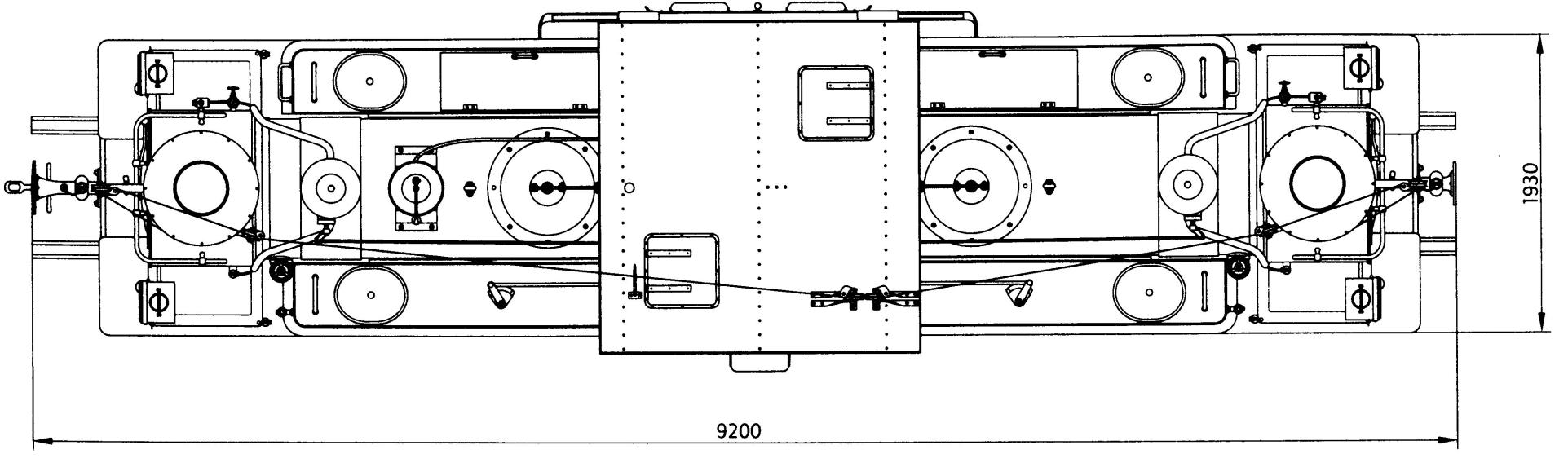
1930
9200